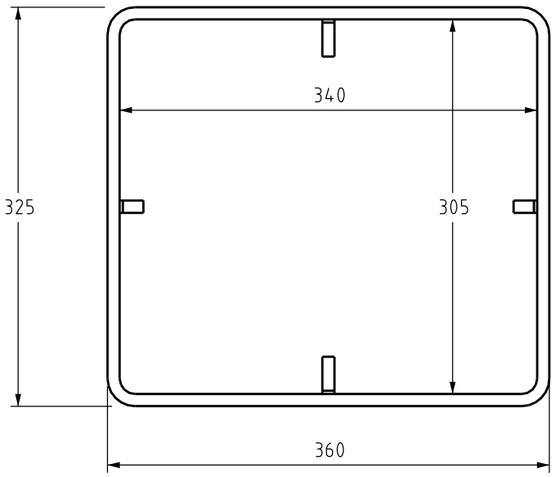

TOP VIEW
SCALE 1:5

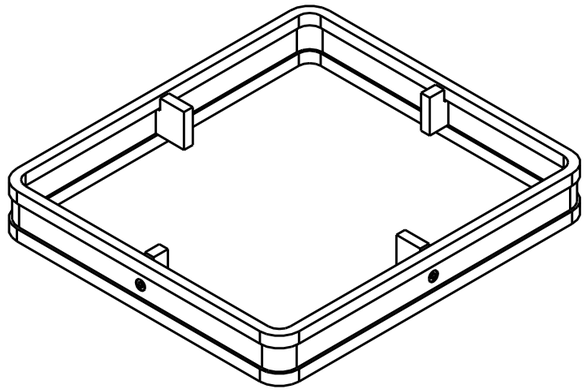

ISOMETRIC VIEW
SCALE 1:5

ITEM NUMBER: 504973

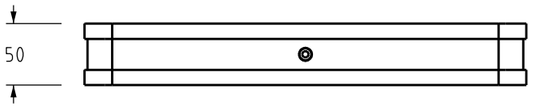

FRONT VIEW
SCALE 1:5

NOTES:

1. THIS DEVICE IS TO BE USED FOR RESIDENTIAL TURRET PILLAR IF BASE HAS SUNKEN INTO GROUND RESULTING IN PILLAR ELECTRICAL INTERNALS INTERFERING WITH PILLAR COVER. DEVICE FITS BETWEEN BASE AND COVER.
2. MATERIAL TO BE POLYPROPYLENE WITH RUBBER SEALS.
3. 4 x M10, 85mm LENGTH BOLTS AND WASHERS INCLUDED.
4. TO COMPLY WITH PWC SPECIFICATION STSP 02-016.

NO	DESCRIPTION	DRN	DATE	CKD	APPD
0	ISSUED FOR CONSTRUCTION	C.C.	NOV'22	B.V.	B.C.

AMENDMENTS

PowerWater
NORTHERN TERRITORY

DES	B.VANDERSTELT
DRN	C.COPPINS
CKD	B.VANDERSTELT
APPD	B.CHEUNG
SCALE	AS SHOWN
ISSUED	NOV-22
ALL DIM. IN mm	
DRAFTING STANDARD TO A.S.1100	

POWER STANDARD DRAWING

DISTRIBUTION PILLARS
RESIDENTIAL TURRET TYPE
COVER RISER

A3

DRAWING NUMBER S02-01-03-18

CAD PRODUCT - DO NOT AMEND MANUALLY

0
AMDT